pennsylvania
DEPARTMENT OF COMMUNITY & ECONOMIC DEVELOPMENT

INSTALLATION GUIDE

FOR RELOCATED MANUFACTURED HOMES

JANUARY 2017

PADCEDnews

Commonwealth of Pennsylvania | Tom Wolf, Governor
PA Department of Community & Economic Development | Dennis M. Davin, Secretary | **dced.pa.gov**

Purpose

This installation guide for relocated manufactured homes is a prescriptive method of installation if the original manufacturer's installation instructions are not available.

This guide attempts to provide a method of installation that will provide proper support, assembly and stabilization for typical manufactured homes being relocated. Unusual manufactured home designs (such as saddle roofs, hinged roofs, tag units, etc.) are not addressed in this document. Relocated manufactured homes that meet the Pennsylvania Habitability Guidelines and are installed consistent with the appropriate installation method are deemed to comply with the Pennsylvania Uniform Construction Code. Any element of the construction or installation not addressed by the Habitability Guide or the appropriate installation guide must meet the requirements of the Pennsylvania Uniform Construction Code.

The Pennsylvania Department of Community and Economic Development (DCED) of the Commonwealth of Pennsylvania makes no warranty, expressed or implied, as to the accuracy or validity of the information contained in this document. Furthermore, DCED assumes no responsibility or liability for the use of this information regarding any instructions provided within.

Authority

Issued under section 5 of the Manufactured Housing Improvement Act (35 P. S. 1658.5) as amended May 9, 2012.

Table of Contents

Introduction 1
Data Plate information 3
Site Preparation and Soil Bearing Capacity 4
Perimeter and Marriage Wall Support 6
Pier Material and Construction 10
Completion of Multiple Section Homes 12
Completion of the Exterior Coverings 15
Multi-Section Bonding 19
Connection of Electrical Crossover Wires 21
Drainage System 23
Gas Connections 24
Fireplace Installation 26
Crawl Space Enclosures 28
Utility System Testing 28

Appendix A – Gas line testing procedures 29
Appendix B – Water supply line testing 30
Appendix C – DWV system testing 31
Appendix E – Electrical operation and continuity testing 32
Installation Checklist 33

Introduction

Applicability and organization of this guide

Scope

This guide covers the installation of typical relocated manufactured homes throughout the Commonwealth of Pennsylvania when the original manufacturer's installation instructions are not available. These instructions are intended to be used on private land as well as land-leased communities.

The construction of all manufactured homes after June 1976 have been regulated by the U.S. Department of Housing and Urban Development (HUD) as authorized by the National Manufactured Home Construction and Safety Standards Act of 1974 (42 U.S.C. 5401). This guide is not intended for homes that predate the Manufactured Home Construction and Safety Standards or for industrialized "modular" homes.

This guide is not to be used for the initial installation of new manufactured homes. The manufacturers' approved installation designs must be utilized for all new manufactured homes.

Types of manufactured homes covered by this guideline

The homes covered under this guide are manufactured homes compliant with the HUD Manufactured Home Construction and Safety Standards, as set forth in 24 CFR Part 3280, 3282 and 3283 and were manufactured after June 15, 1976.

The provisions of this guide are intended to apply to typical manufactured homes (single-section and multisection) for use as a single-family dwelling. Unusual designs and configurations may require special considerations not addressed in this guide.

The enclosed details pertain to the installation of a "manufactured home" as defined as a structure, transportable in one or more sections, which, in the traveling mode is eight body feet or more in width or 40 body feet or more in length, or when erected on site, is 320 or more square feet, and which is built on a permanent chassis and designed to be used as a dwelling with or without a permanent foundation when connected to the required utilities and includes the plumbing, heating, air-conditioning and electrical systems contained therein.

Installation details, such as, soil bearing capacity, frost protection, site grading and utility connections must comply with the local municipal requirements and the Pennsylvania Uniform Construction Code.

Applicability

This guide is designed to be utilized by installers as well as local authorities having jurisdiction and responsibility for building code enforcement. It is intended to apply to new or existing manufactured home sites.

Should any unusual circumstances occur, consult with the local authority having jurisdiction to ensure proper installation. The services of a Pennsylvania registered design professional may be required to ensure proper installation.

Safety

Manufactured homes weigh several tons. Use caution and plenty of temporary blocking to support the home during installation. No one should be permitted under the home unless it is completely supported. For additional information on residential construction safety visit: www.osha.gov

Permitting

Local permitting and inspection requirements apply. Building permits are required prior to the start of installation. Contact the local municipality or designated agency for the building permit and to schedule necessary inspections and to obtain a certificate of occupancy. To obtain a certificate of occupancy or other similar approval from the local building code official, a Pennsylvania certified manufactured home installer will be required to certify the installation of the manufactured home to the building code official on a form provided by DCED along with the completed Installation Checklist found at the back of this booklet. Additionally, the permit applicant or his agent will be required to determine if the relocated manufactured home complies with the Pennsylvania Habitability Guidelines for Relocated Manufactured Homes.

Site Accessibility

Before attempting to move a manufactured home, ensure that the transportation equipment and home can be routed to the installation site. Special transportation permits may be required.

Encroachments and Setback Requirements

Local laws regarding encroachments in streets, yards and courts shall be observed. Permissible setback distances and fire separation requirements from property lines and public roads and other structures shall be met.

Flood Plain Areas

Special elevation and anchoring requirements are required when placing a manufactured home in a flood plain. Refer to "Protecting Manufactured Homes from Floods and Other Hazards" FEMA P-85, Second Edition/Nov. 2009.

Definitions

Certified Installer Is a person trained and certified by the Pennsylvania Department of Community and Economic Development to perform on-site completion and installation of manufactured homes.

Data Plate An information sheet located in the home that identifies the manufacturer, serial number and the wind, roof and climatic zones for which the home was constructed.

DCED The Pennsylvania Department of Community and Economic Development.

Must Indicates a mandatory requirement.

Shall Indicates a mandatory requirement.

Should Indicates a recommendation that is strongly advised but not mandatory.

Data Plate Information

The data plate is typically located inside a kitchen cabinet, in a bedroom closet or on the electrical panel-board cover area. If the data plate is not available, additional inspections may be required to determine if the home was constructed for the Pennsylvania climate.

TYPICAL DATA PLATE

1. **Identify the date of manufacture.**
2. **Identify the serial number.** ***(Cross reference to the front crossmember of the chassis.)***
3. **Identify Wind Zone** ***(Pa. – WIND ZONE 1)***
4. **Identify Roof Snow Load Zone.** ***(Pa. – SOUTH (20) ZONE)***

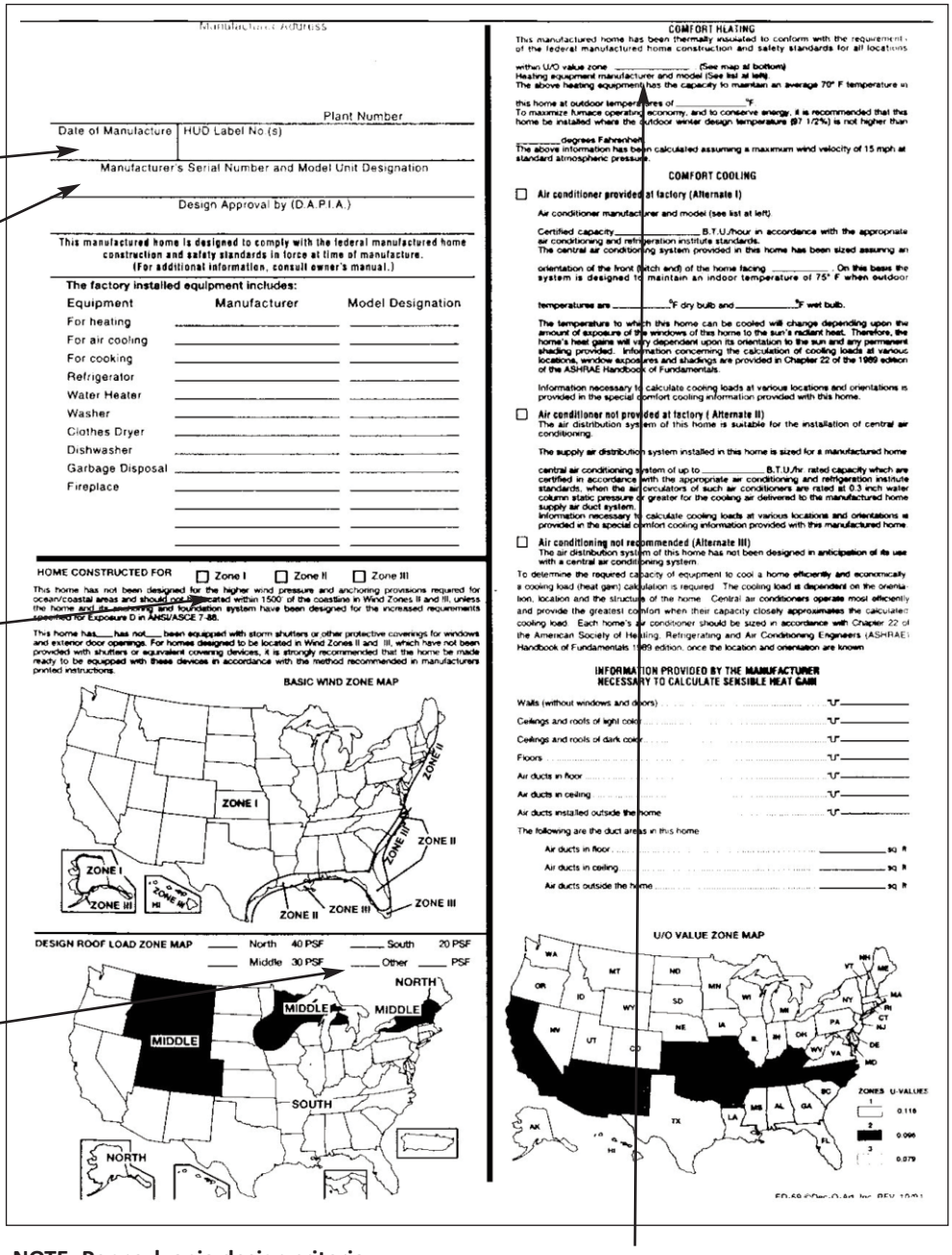

NOTE- Pennsylvania design criteria:
Home manufactured after OCTOBER 1994 - CLIMATE ZONE 3.
Homes manufactured between June 1976 – October 1994 - CLIMATE ZONE 2.

Site Preparation and Soil Bearing Capacity

The site for the placement of the manufactured home should be firm, undisturbed soil or compacted fill. Consideration for the soil (load) bearing capacity must be made. In order to determine the soil bearing capacity, use one of the following methods (Subject to approval by local municipality):

1. Contact the local municipality regarding soil bearing as they may have established their own requirements.
2. Refer to the International Residential Code presumptive load-bearing values of foundations materials, IRC R401-4.1.
3. A soil test conducted by a geotechnical engineer.

The site must be graded to prevent surface water or drainage from accumulating under the home. The grade away from the foundation shall fall a minimum of five inches within the first 10 feet. *(See figure below)*

Exception: Where lot lines, walls, slopes or other physical barriers prohibit five inches of fall within 10 feet, drains or swales shall be provided to ensure drainage away from the structure.

The Pennsylvania Housing Research Center (PHRC) technical brief **Site Design Considerations for Manufactured Housing** may be consulted for additional guidance.

Remove all vegetation (grass, weeds, roots, wood, etc.) from under the home.

Figure 1-1

SITE PREPARATION

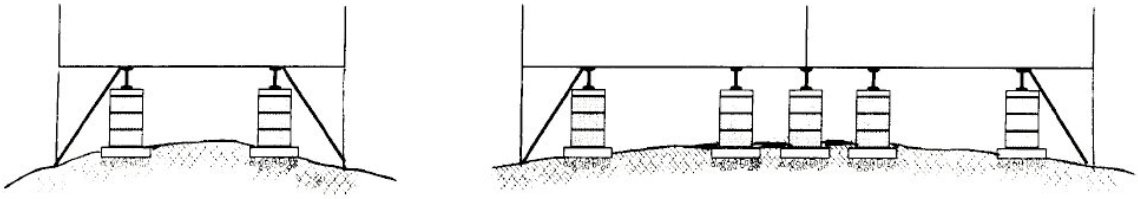

Slope the ground a minimum of ½ inch per foot at least 10 feet away from the perimeter of the home.

Contact the local municipality for property line set back and fire separation requirements.

Ground Vapor Barrier

A six-mil polyethylene ground vapor barrier must be placed on top of the ground covering the entire surface under the home. This barrier is only effective with a properly graded site. Minimum 12" overlap required at all joints or seams.

Frost Protection

Place footings below the frost line. Contact the local municipality regarding frost depth. The Pennsylvania Housing Research Center (PHRC) guideline **Soil Freeze Depth Guide for Manufactured Housing in PA** can provide additional guidance.

Determining Footing Size and Pier Load

Footings shall be poured-in-place concrete pads or runners at least six inches thick with a 28-day compressive strength of 3,000 pounds per square inch. Refer to following table to determine the area in square inches of the footing based on the width of the home, support spacing and support loading. *Use Table 2-2 for round footings.*

FOOTING AREAS REQUIRED FOR SOIL BEARING CAPACITY

Design Roof Load 20 Pounds Per Square Foot

Section Width (feet)									
	12	14	16	12	14	16	12	14	16
Support Spacing (feet)									
	6	6	6	8	8	8	10	10	10
Support Loading (pounds per pier)									
	3200	3700	4250	4250	4950	5650	5300	6150	7050
Soil Bearing Capacity (lbs/ft²)	**Footing Area (square inches)**								
1000	461	533	612	612	713	814	763	886	1015
1500	307	355	408	408	475	542	509	590	677
2000	230	266	306	306	356	407	382	443	508
3000	154	178	204	204	238	270	254	295	338
4000	144	144	153	153	178	203	191	221	254

Pier Support Loading Example

Determine soil bearing capacity, the section width and pier spacing you are going to use. Using the chart above, a 14' section width (may be a single-section or one section of a multisection home) and an eight foot pier spacing, the support loading (pounds per pier) is 4,950 lbs. To determine the footing area, assume a 1,500 lbs/ft^2 (psf) soil bearing and the footing area will be 475 square inches.

Based on the square inches needed for the footing, use Table 2-2 to convert to a round footing if needed.

Table 2-2

FOOTING DIAMETER

Area (sq. inches)	Footing Size (round)
0 to 353 sq. inches	18 inch diameter
354 sq. inches to 579 sq. inches	24 inch diameter
580 sq. inches to 862 sq. inches	30 inch diameter
863 sq. inches to 1018 sq. inches	36 inch diameter

Round Footing Example

If you require a footing of 475 square inches as noted in the above example, the footing should be 24 inches in diameter (round).

Other Foundations

Check with local building code officials and consult a registered design professional when the manufactured home is to be sited on a permanent foundation (crawl space or basement). Comply with the Pennsylvania Uniform Construction Code as applicable. Contact the manufacturer of the home to receive their foundation design data.

Reinforced Slab on Grade – *Land Lease Communities Only*

Refer to Option C (Reinforced slab on grade) in the ***Pennsylvania Field Guide, FOUNDATION SYSTEMS for Relocated Manufactured Housing, 2007,*** by the Pennsylvania Housing Research Center at Penn State University. This foundation may only be used in land lease communities.

Perimeter and Marriage Wall Support

Openings 4 feet or greater located along the exterior sidewall and marriage wall of the home must be supported on both sides of the openings. On the exterior sidewall, these areas are typically sliding glass doors, large picture windows, recessed entries or multiple windows in one large opening.

For homes manufactured after January 1, 2011, if there is a decal adjacent to the data plate that indicates any opening 4 feet or more does not require support, the support identified on the decal may be omitted.

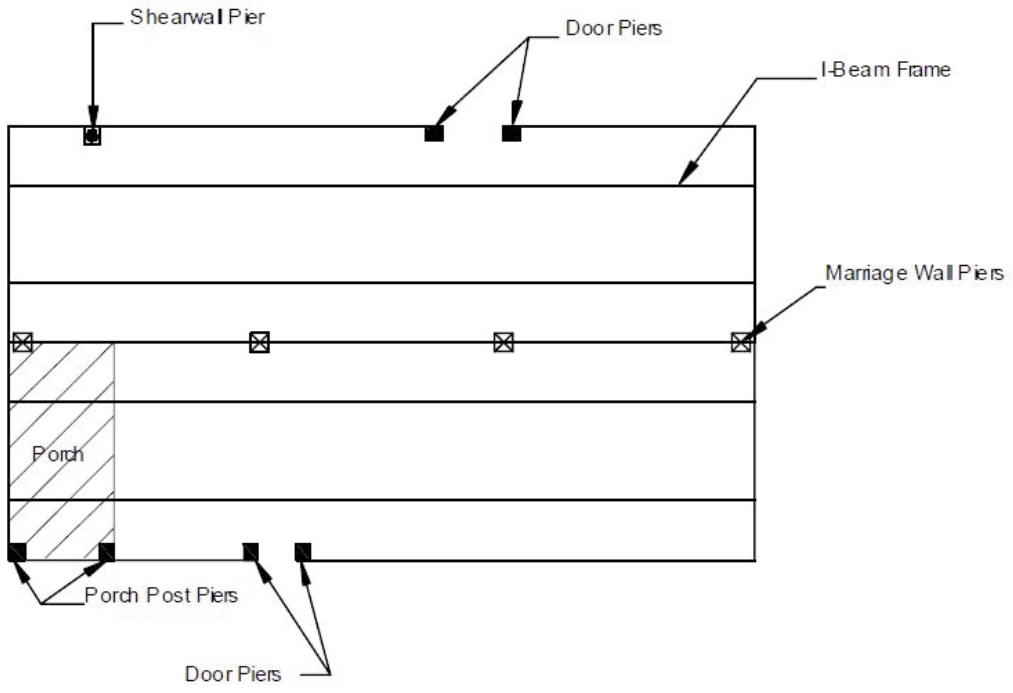

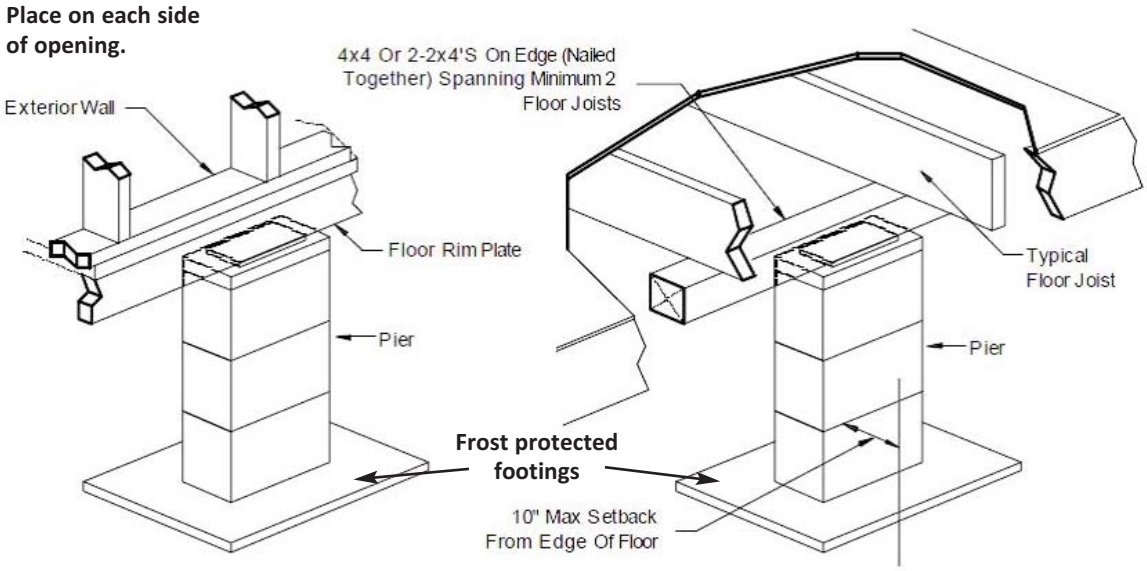

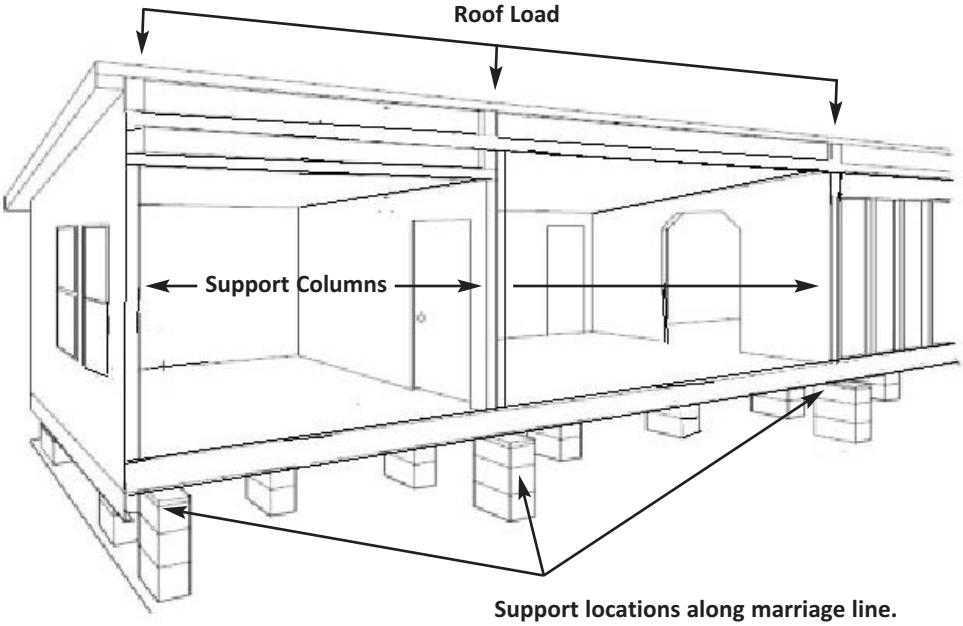

Support locations along marriage line.
These locations may include doorways. (4' wide or more)

Be sure to use the proper chart based on the width of the manufactured home being installed.

12' WIDE SECTION HOMES-MATING/PERIMETER WALL OPENING

	Roof Live Load (psf)	PIER LOAD AND MINIMUM PIER CAPACITY FOR 12 FOOT WIDE SECTION (pounds)						
		Mating/Perimeter Wall Opening (feet)						
		5	10	15	20	25	30	35
	20	900	1800	2600	3500	4400	5300	6100
	30	1200	2300	3500	4700	5800	7000	8200*
	40	1500	2900	4400	5800	7300	8800*	10200*
Soil Bearing Capacity (psf)	Footing Area (square inches)							
1000	20	144	259	374	504	634	763	878
	30	173	331	504	677	835	1008	1181
	40	216	417	634	835	1051	1267	1469
1500	20	144	173	250	336	422	509	586
	30	144	221	336	451	557	672	787
	40	144	278	422	557	701	845	979
2000	20	144	144	187	252	317	382	439
	30	144	166	252	338	418	504	590
	40	144	209	317	418	526	634	734
3000	20	144	144	144	168	211	254	293
	30	144	144	168	226	278	336	394
	40	144	144	211	278	350	422	490
4000	20	144	144	144	144	191	191	220
	30	144	144	144	169	209	252	295
	40	144	144	158	209	263	317	367

***Individual supports shall NOT support loads greater than 8,000 pounds for a single stack of 8" x 8" x 16" stack of blocks, 16,000 pounds for a double stack.**

Be sure to use the proper chart based on the width of the manufactured home being installed.

14' WIDE SECTION HOMES-MATING/PERIMETER WALL OPENING

	Roof Live Load (psf)	PIER LOAD AND MINIMUM PIER CAPACITY FOR 14 FOOT WIDE SECTION (pounds)						
		Mating/Perimeter Wall Opening (feet)						
		5	10	15	20	25	30	35
	20	1000	2000	3000	4100	5100	6100	7100
	30	1400	2700	4100	5400	6800	8100*	9500*
	40	1700	3400	5100	6800	8400*	10100*	11800*
Soil Bearing Capacity (psf)	Footing Area (square inches)							
1000	20	144	288	432	590	734	878	1022
	30	202	389	590	778	979	1166	1368
	40	245	490	734	979	1210	1454	1699
1500	20	144	192	288	394	490	586	682
	30	144	259	394	518	653	778	912
	40	163	326	490	653	806	970	1133
2000	20	144	144	216	295	367	439	511
	30	144	194	295	389	490	583	684
	40	144	245	367	490	605	727	850
3000	20	144	144	144	197	245	293	341
	30	144	144	197	260	326	389	456
	40	144	163	245	326	403	485	566
4000	20	144	144	144	148	184	220	256
	30	144	144	148	194	245	292	342
	40	144	144	184	245	302	364	425

***Individual supports shall NOT support loads greater than 8,000 pounds for a single stack of 8" x 8" x 16" stack of blocks, 16,000 pounds for a double stack.**

Pier Material and Construction

Pier Material

Concrete Block – Nominal dimensions of at least 8" x 8" x 16", maximum load 8,000 lbs, conforming to ASTM designation C90, grade N.

Cap Blocks – Solid masonry (nominal 2" x 8" x 16" OR 4" x 8" x 16" pre-cast without reinforcement) pressure-treated lumber (nominal 2" x 8" x 16"). Caps must be the same size as the pier being capped.

Spacers – Nominal 2" thick boards (pressure treated) (2" x 4" min.)

Shims – Hardwood, minimum 4" width by 6" length by maximum 1" thick (nominal); plastic must be listed with maximum load capacity. All shims must be used in pairs.

Pier Construction

	Height	Configuration	Maximum Load	Mortar and Reinforcement
FRAME Support Piers	12" to 36"	Single stack concrete blocks perpendicular to beam	8,000 lbs	Not required
	36" to 67"	Double stack interlocked concrete blocks	16,000 lbs	Not required
	Over 67"	Designed by a professional engineer or registered architect.		
PERIMETER Support Piers	54" or less	Single stack concrete blocks with long side parallel to floor rim joist.	8,000 lbs	Not required
MARRIAGE LINE Support Piers	54" or less	Single stack concrete blocks with longs side perpendicular to the marriage line.	8,000 lbs	Not required

1. Before constructing the pier on top of the footing assure the footing surface is flat, smooth and free from debris.

2. **Stack concrete blocks with their hollow cells aligned vertically.** When piers are constructed of blocks stacked side by side, orient each layer at right angles to the previous one *(See illustration page 11)* and plan blocks so that split caps will be perpendicular to the blocks they rest on and to the main beam. Remember to maintain minimum 12" clearance between the ground and the bottom of the chassis.

3. **Cap Piers.** Place a cap on hollow block piers to evenly distribute the load across the entire pier. Use cap blocks the same length and width as the piers they rest upon. When using split caps on double stacked piers, install the cap blocks with the long dimension perpendicular to the joint in the blocks below and to the main beam.

4. **Install Shims.** Use shims (as described on page 1) to level the home and to fill any gaps between the top of the cap block and the main beam. **ALWAYS USE SHIMS IN PAIRS.** *(See illustration page 11)* Drive them in tightly so they do not occupy more than one inch of vertical space. For split cap blocks, install shims and dimension lumber or blocks over each cap block.

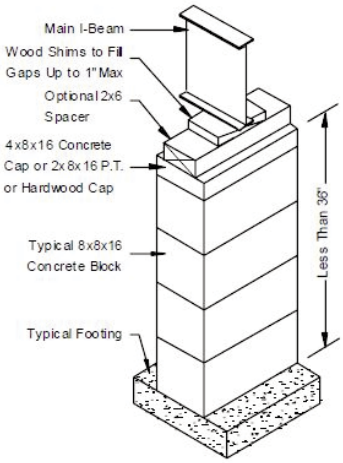

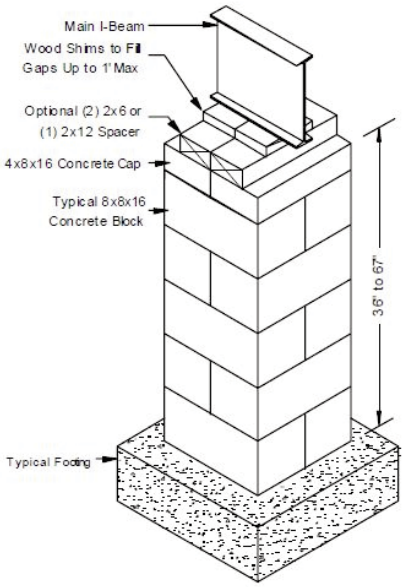

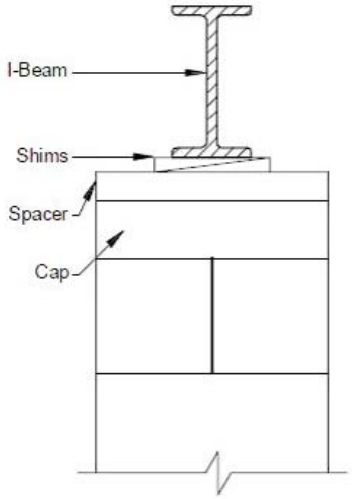

1. **Be sure to use full size cap blocks to evenly distribute the load across the entire pier.**
2. **Do not use broken or defective concrete blocks.**

Alternate Pier Types

Metal jack stands or precast concrete piers may be utilized provided each is listed and labeled to indicate the maximum capacity. Metal piers or any other type of metal foundation must be coated to protect from corrosion, properly secured in place and in all properly stamped for identification.

In all cases, the foundation footings must extend below frost depth penetration of the soil.

Completion of Multiple Section Homes

ONLY manufactured home sections designed by the manufacturer for assembly as an integrated structure (multisection) may be joined. Dissimilar sections of manufactured homes must never be assembled together to form a dwelling unit.

1. Remove ALL shipping materials and associated fasteners from all sections to be joined, including the plastic used to close up the marriage wall for transportation. Do not remove any temporary supports along the marriage line opening until the sections have been secured.

2. **Install a marriage line gasket.** A continuous nonporous gasket creating a permanent air barrier between the two sections MUST be installed along the floor, endwalls and ceiling line (not at the top of the roof line).

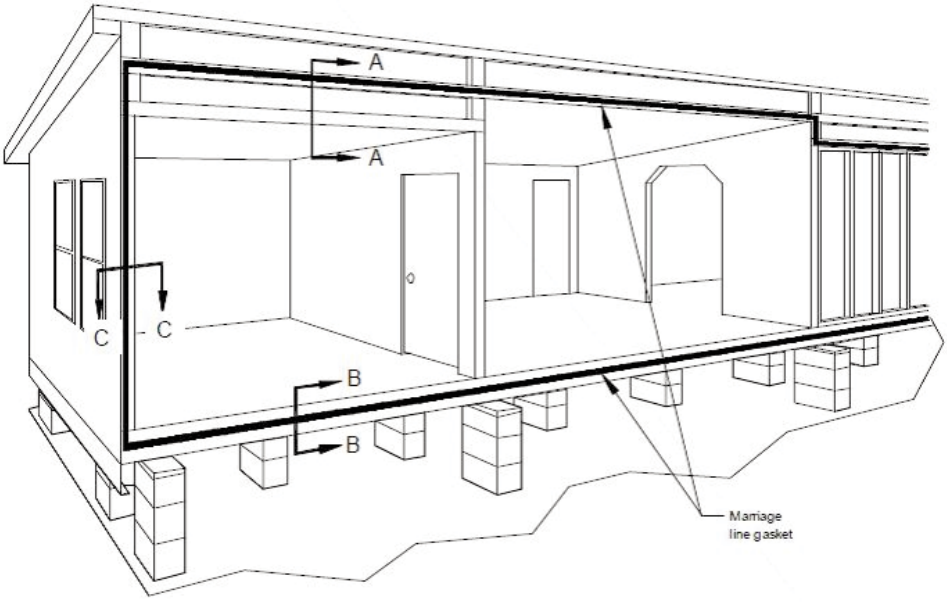

3. **Prepare the crossover connections.** Before moving the two sections together, prepare any crossover (utility) connections that require access from the open marriage line, including duct connections (if present) and marriage line interior wall electrical or plumbing connections.

4. Position the sections as closely as possible and line up with the previous set section.

5. **Construct support piers.** With the home sections aligned, construct the piers according to pages 10-11.

6. **Level the sections.** Lower the section to the outside piers first, inside piers last. Check interior doorways and other openings for misalignments that may cause problems during the final trim work. Floors and roof sections should be flush, level and tight.

7. **Shim gaps.** If any gap exists between the sections, use dimensional lumber along the entire length to shim such gaps. Increase the fastener length to ensure proper connection between each section.

MULTISECTION FASTENING REQUIREMENTS
(Roof, Floor, Endwall and Interior Openings)

Connection Location	Fastener Size	Fastener Angle	Fastener Spacing
Roof ridge beam connection	3/8” x 6” lag screws* w/ washers	45°	24 o.c.
Roof rafter connection	4” x 10” 18 gauge straps with 10 – 10d nails	90°	24o.c.
Floor rim joist connection	3/8” x 6” lag screws* w/ washers	45° or less	24” o.c.
Endwall connection	#8 x 4” wood screw* or 16d Nail*	45° or less 45° or less	24” o.c. 24” o.c.
Marriage line interior wall connection	#8 x 4” wood screw*	45° or less	16” o.c.

***or equivalent fastener**

ROOF CONNECTION (LAG SCREW) DETAILS

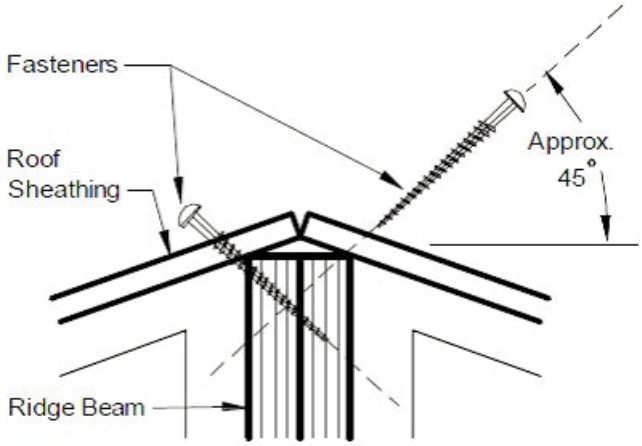

ROOF CONNECTION (STRAP) DETAILS

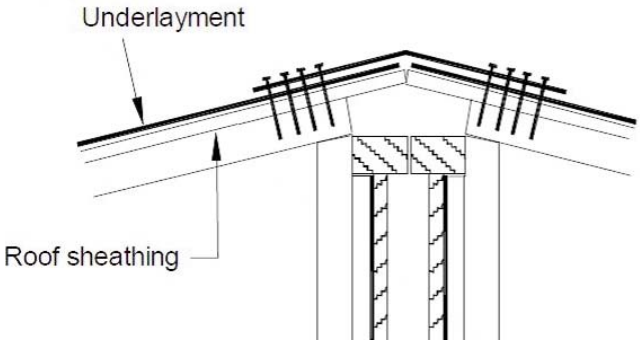

Note: Be sure that the roof is vented. If static roof vents (spot vents) are not provided (maximum 10’ apart), install a ridge vent at least 50 percent of the roof length. Assure roof deck is cut back to allow free flow of air.

FLOOR CONNECTION DETAILS

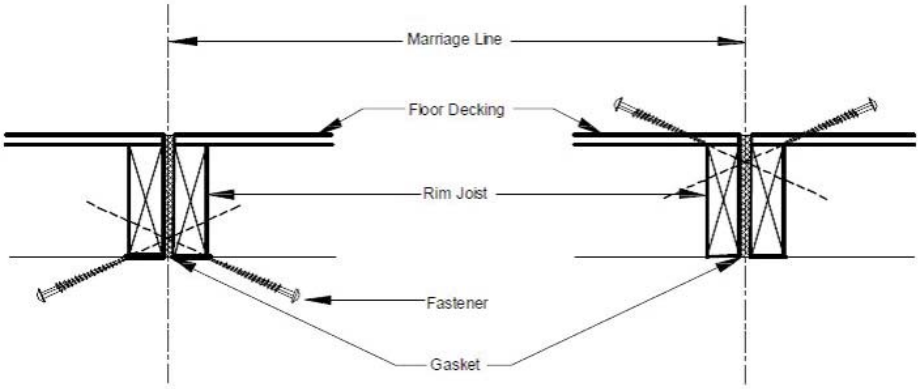

ENDWALL CONNECTION DETAILS

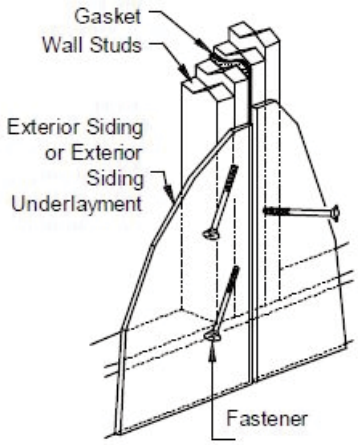

MARRIAGE LINE WALL OPENING CONNECTION DETAILS

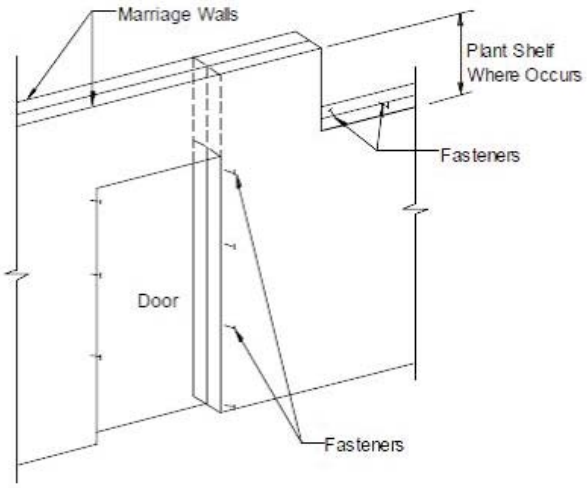

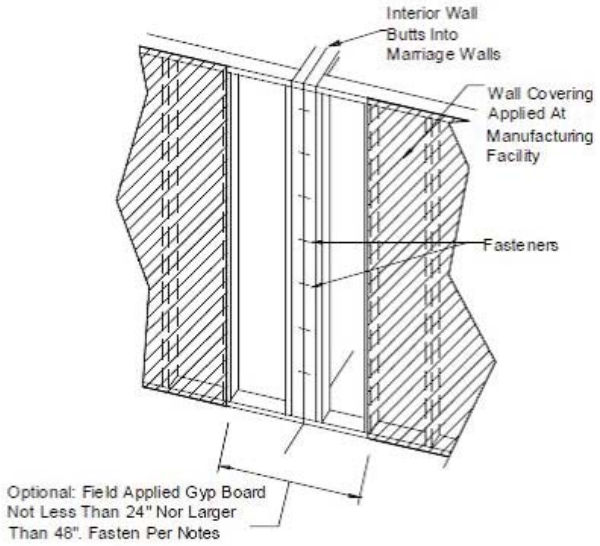

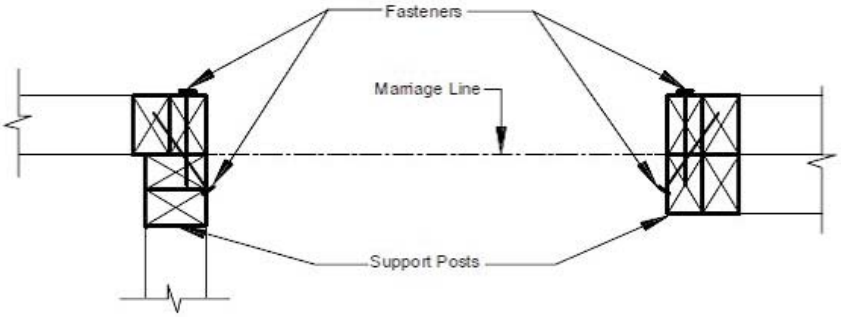

Completion of the Exterior Coverings

For multisection homes, the first step in completing the exterior close-up is sealing the roof along the ridge line. For homes with asphalt or fiberglass roof shingles, follow the details below where no ridge vent is to be installed.

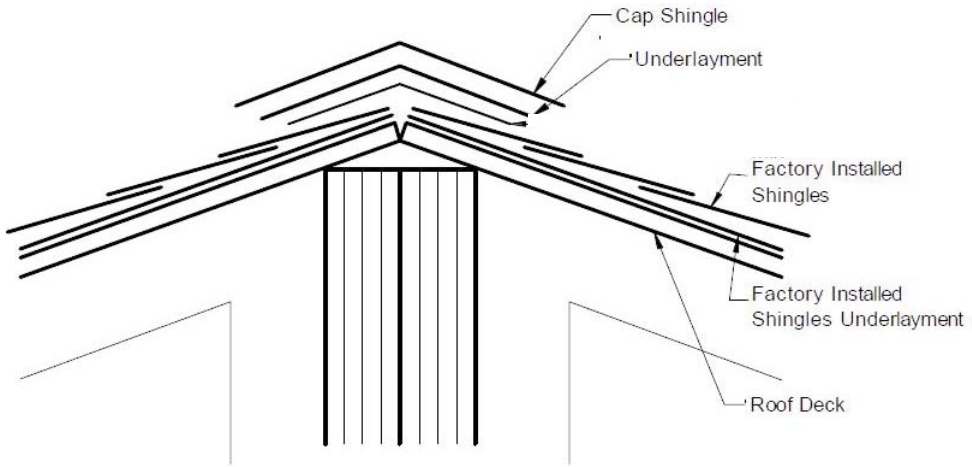

1. Make sure the roof sheathing is properly installed. Place 15# felt or equivalent, continuously along the length of the ridge, covering all exposed sheathing and overlapping sheathing joints by at least 5 inches on each side. Fasten using 1" x 1" x 16 gauge-galvanized staple.

2. Install shingles by using 1"x 1" x 16 gauge-galvanized staples or 12 gauge 1 ¼" long ⅜" diameter head roof nails. Fasten in accordance with the product manufacturer's designs. ***Note: If the roof was intended for installation of a ridge vent, be sure to install the ridge vent in accordance with the product manufacturer's designs for proper roof ventilation.**

Install Siding

Fasten siding at stud locations with corrosion resistant fasteners. Siding should be installed in a manner to allow expansion and contraction as the temperature changes. Be sure to remove shipping material prior to the installation of the vinyl siding. Follow the installation instructions provided with the siding. If they are not available, you can assess instructions at www.vinylsiding.org.

Install the Anchoring System

All manufactured homes must be anchored to resist overturning and lateral movement (sliding) of the home as imposed by the respective design loads. Pennsylvania is located within the Wind Zone 1 area, therefore only diagonal ties are required.

Ground augers must be:

- Listed in accordance to ASTM D3953-1
- Sufficient length to extend below the frost line
- Embedded to full depth
- Be placed 12 inches above the water table
- Ground augers are not embedded in the concrete footings

ANCHOR SPACING

Anchors must be located within 2 feet from the end of the home. Space anchors according to the chart below. This chart applies to single-section and two-section homes.

Section Width	Sidewall Height	Height from Ground to Strap Attachment	Roof Slope Maximum Single and Double Section			
			4/12	5/12	6/12	7/12
10’ to 12’	Up to 7’-6”	Up to 25”	10’-9”	7’-6”	7’-0”	6’-6”
		26” to 48”	7’-6”	5’-6”	5’-0”	4’-6”
		49” to 67”	7’-6”	5’-6”	5’-0”	4’-6”
	Greater than 7’-6”	Up to 25”	8’-3”	6’-0”	5’-5”	5’-0”
		26” to 48”	6’-9”	5’-3”	4’-9”	4’-3”
		49” to 67”	6’-9”	5’-0”	4’-6”	4’-3”
14’ to 16’	Up to 7’-6”	Up to 25”	11’-9”	8’-6”	8’-0”	7’-3”
		26” to 48”	9’-6”	6’-3”	5’-9”	5’-3”
		49” to 67”	7’-9”	5’-3”	4’-9”	4’-3”
	Greater than 7’-6”	Up to 25”	11’-6”	8’-6”	7’-10”	7’-3”
		26” to 48”	7’-9”	6’-6”	6’-0”	5’-3”
		49” to 67”	7’-6”	6’-0”	5’-3”	4’-3”

1. To determine the height from ground to strap attachment, add the I-beam size with the height of the pier. For example, a 10 inch I-beam plus the height of a 24 inch pier the “height from ground to strap attachment” will be 34 inches.

2. For homes with a roof pitch greater than 7/12 consult a professional engineer.

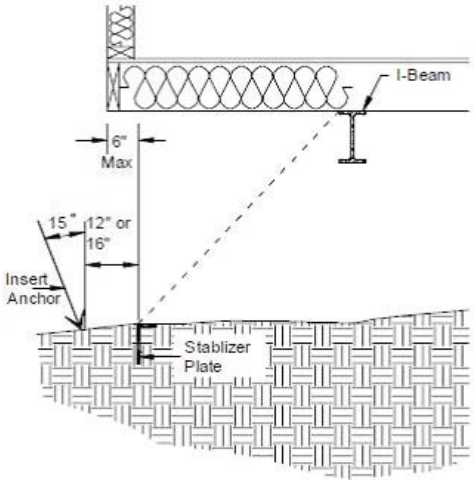

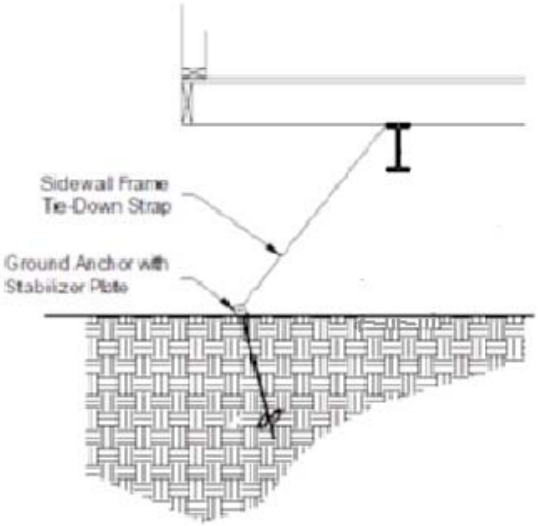

1. Install the anchor into the ground using an auger 6-12 inches back from the stabilizing plate location and within six inches of the skirting line.

2. Drive the stabilizing plate into the ground to full depth.

3. Pretension the anchor strap as to draw the anchor up to the stabilizing plate.

Protect the strap at the sharp corners.
If the strap wraps around the main beam, provide protection from the sharp edges of the top and bottom flange of the beam. Typically a piece of steel strapping cut to length or a listed product is acceptable.

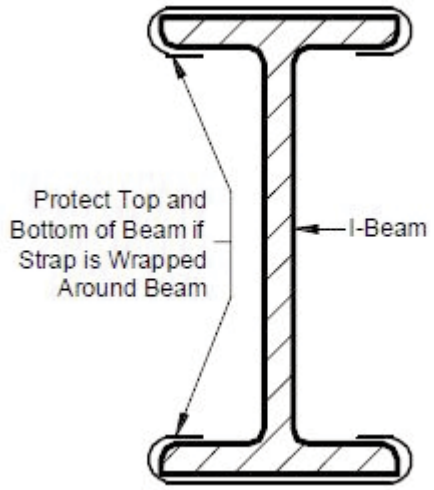

ANCHOR STRAP ATTACHMENT

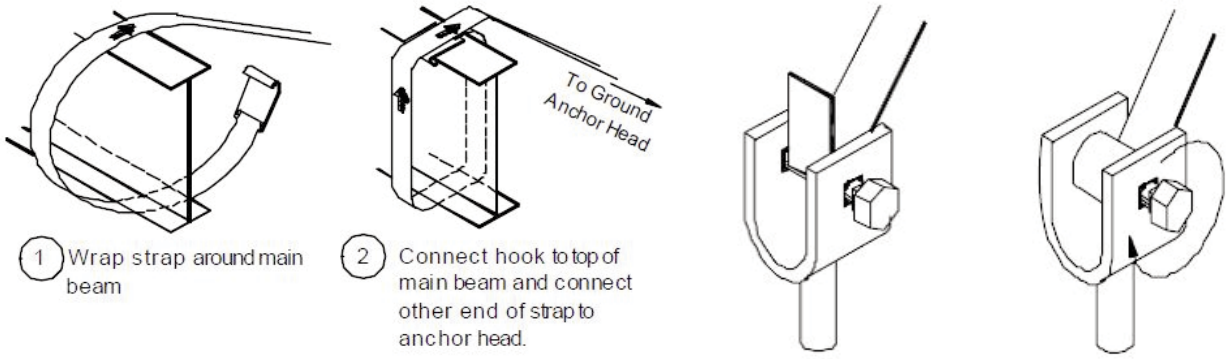

1. Connect the head of the strap (buckle clip or hook) to the top of the main beam, then wrap the strap around the bottom of the beam, bring the strap over the head and guide the strap to the anchor head.
2. Connect the other end of the strap to the split bolt on the anchor head. Leave enough strap length to make at least three complete turns around the bolt, but no more than 5 complete turns before it comes tight.

Anchor Head Location

As the anchor is pulled up (by tightening) to meet the stabilizing plate, the head of the anchor will rise. In its final position, the bottom of the anchor head should be no more than ¼" above the top of the stabilizing plate.

Alternative Anchoring Systems

Alternative anchoring systems may be used only if the product is listed by a nationally published and recognized testing laboratory, inspection agency or other organization concerned with product evaluation that maintains periodic inspection of production of listed equipment or materials and whose listing states either that the equipment or material meets nationally recognized standards or has been tested and found suitable for use in a specific manner. Follow the product manufacturer's designs. **Pay attention to any parameters that the product manufacturer has noted in their instructions such as maximum pier height and maximum roof pitch requirements.**

Shear Wall Straps

Shear wall straps (sometimes called G straps) are sometimes required on certain manufactured homes. Watch for anchor straps that may be attached to the side wall or marriage wall of the home. If present, attach to ground auger installed vertically, directly below the strap. Additionally, a single block pier on a frost protected concrete footing is required to support the floor joist at this same location. Maximum load on this pier is 3,500 lbs.

Multisection Bonding

To ensure all metal parts on multisection homes are effectively grounded, bond the chassis together. Solder-less ground lugs provided at the outriggers or cross-members with a #8 minimum bare copper wire connecting the ground lugs.

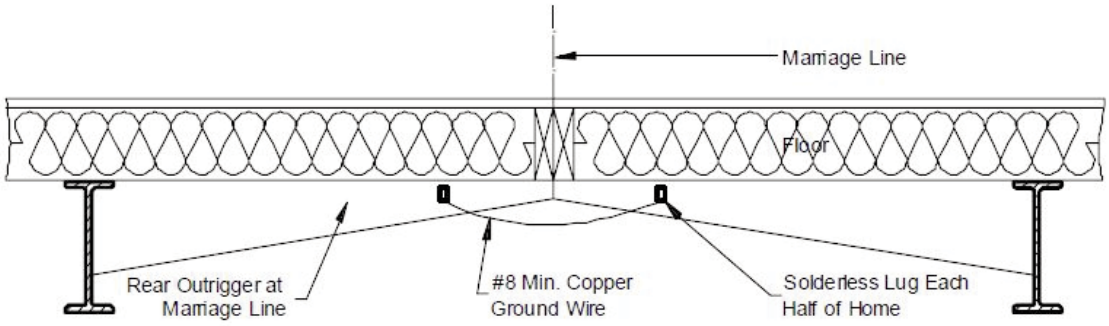

Attach strap. If ground lugs and copper wire are not provided, attach the provided four-inch bonding strap to each pair of adjacent chasses with two #8 x 3/4" self-tapping metal screws (one screw each side).

Grounding

The home must be properly grounded to protect the occupants. The only safe and approved method to ground the home is through an electrically-isolated ground bar in the panel board. Isolate the neutral circuit terminal in the panel board and in ranges, clothes dryers and mounted cooking units from the equipment enclosures. Bonding screws, straps or buses in the panel board or in appliances should be discarded.

Heat Duct Crossover Connections

For multiple section homes, the heat duct crossover located under the home should be assembled in accordance with one of the below details. This duct should be properly secured and be made substantially airtight. Ducts exposed directly to the outside air shall be insulated with materials having a minimal thermal resistance of R=4.0 with a continuous vapor barrier. All openings in the bottom board shall be properly sealed at these areas. The Installer must check for air leakage at all crossover duct connection locations of the home.

THIS SYSTEM MAY BE USED WHEN THERE IS NOT A CROSSOVER DUCT BUILT INTO THE FLOOR AND THE FURNACE IS OUTSIDE THE I-BEAM.

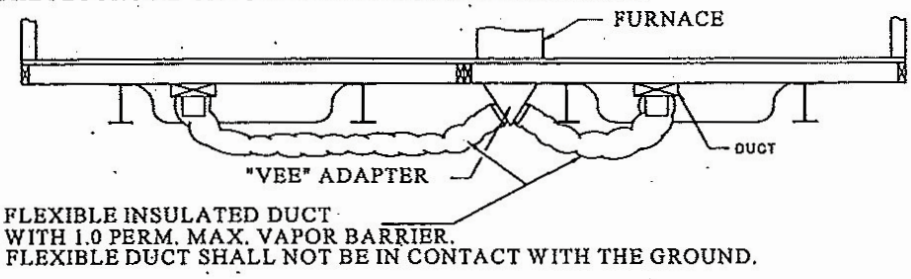

THIS SYSTEM MAY BE USED WHEN THERE IS NOT A CROSSOVER DUCT BUILT INTO THE FLOOR AND THE FURNACE IS SITUATED DIRECTLY OVER THE MAIN DUCT ON ONE SECTION OF THE HOME.

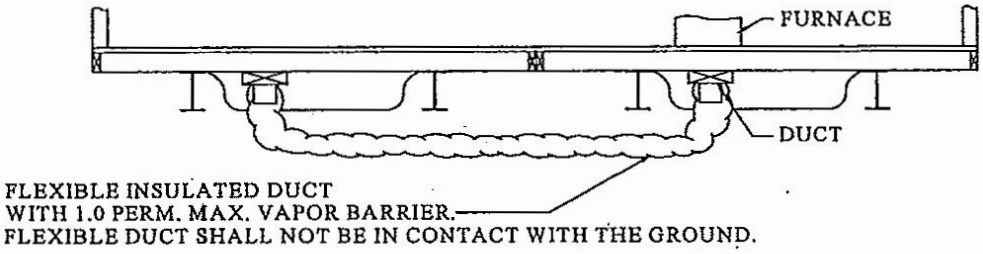

THIS CROSSOVER DUCT SYSTEM IS INCORPORATED IN THE FLOOR OF THE HOME. THE CONNECTION IS MADE AT A POINT ALONG THE CENTER LINE OF THE HOME WHERE THE DUCTS EXIT THRU THE SIDE RAIL. THE CONNECTION MUST BE SEALED TO MAKE IT AIRTIGHT.

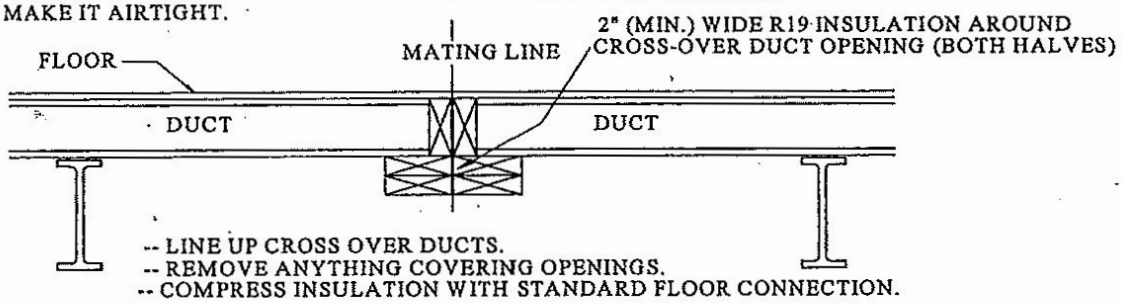

THIS SYSTEM MAY BE USED WHEN THERE IS NOT A CROSSOVER DUCT BUILT INTO THE FLOOR AND THE FURNACE IS SITUATED DIRECTLY OVER THE MAIN DUCT ON CENTER SECTION OF THE HOME.

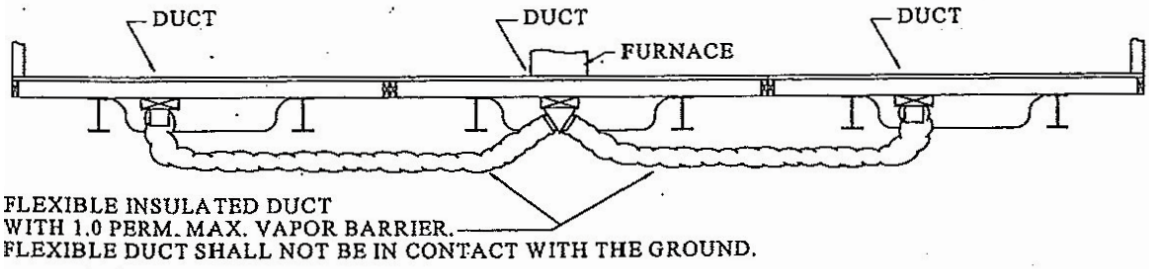

Connection of Electrical Crossover Wires

Multisection homes may have one or more crossovers located in wall(s) and/or floor(s) along the marriage line.

Two types of connections may be present at these locations; snap connectors and/or junction boxes. Identify matching circuits if multiple circuits exist at a single crossover location. They should be coded for identification. Connect the snap connectors according to the product instructions.

If junction boxes are utilized, cover plates, cable clamps and wire nuts must be used. Metal junction boxes must be grounded.

If "snap-type" connectors are utilized, they must be examined for damage prior to re-assembly. Many "snap-type" connectors may not be re-assembled. Check the instructions on each connector to determine if this is the case.

FLOOR CONNECTION

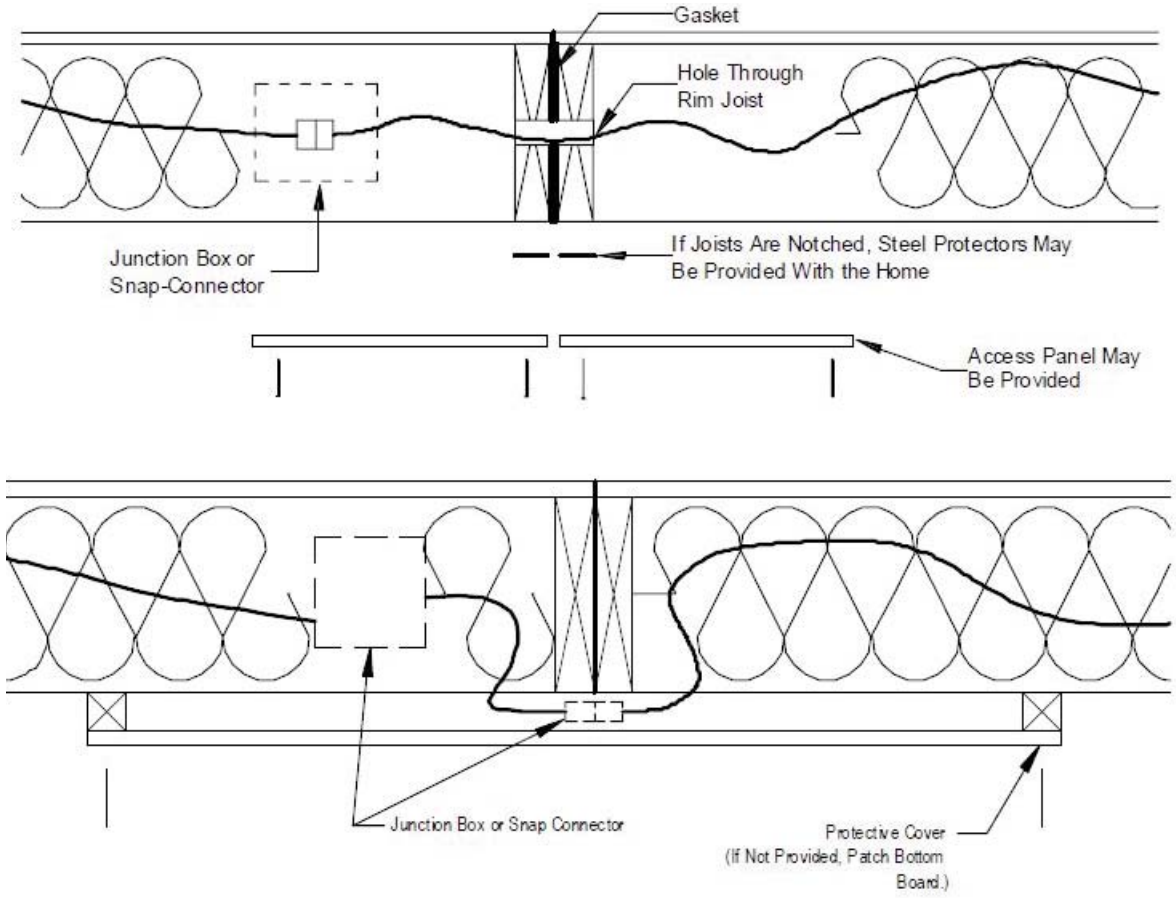

Be sure all exterior coverings or access panels are properly replaced.

WALL CONNECTION

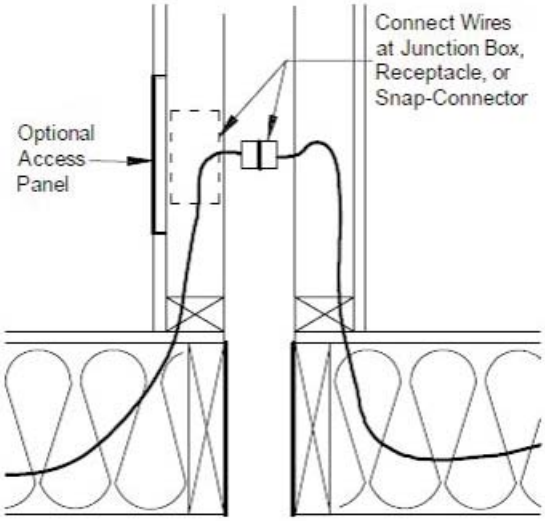

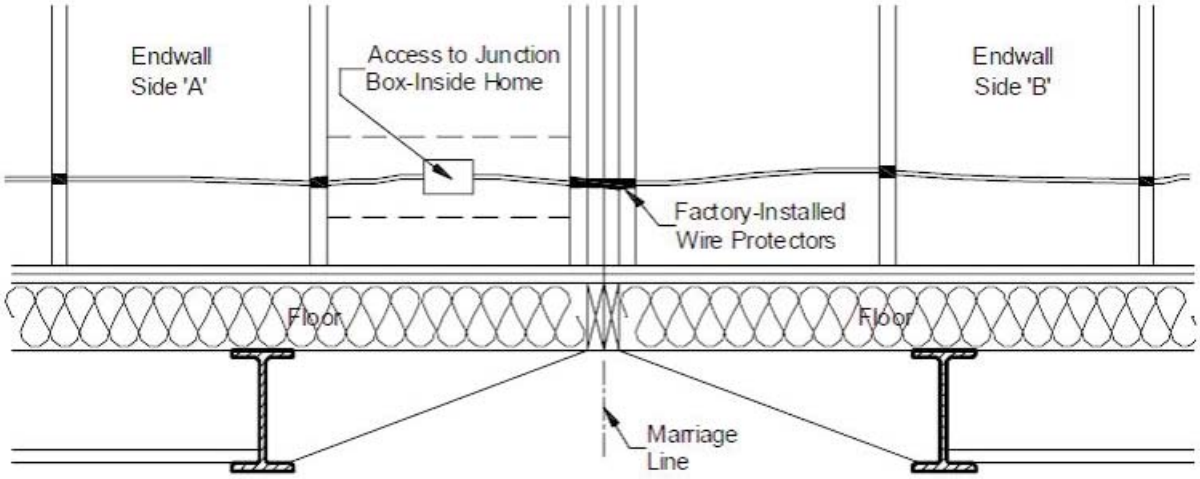

CONNECT THE WATER LINES

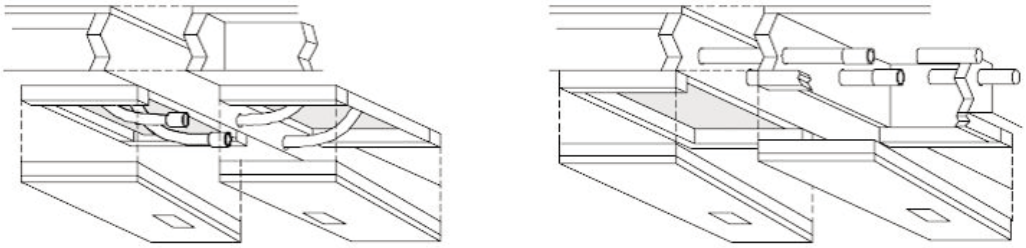

Connect the water lines inside the floor through the access panels or below the bottom board as follows:

1. Remove the access panels and connect the water lines, pull water line through holes (if present) in the rim joist and connect the threaded lines (non-threaded, use approved cement).
2. Test for leaks. (Refer to Appendix B for procedures.)
3. Replace insulation and access panels to prevent the water lines from freezing.

Drainage System

Be sure that all traps are provided with proper venting so that there will be no danger of siphonage, aspiration or forcing traps seals under conditions of ordinary use. The sanitary drainage system under the home shall be adequately supported with approved materials and properly sloped to drain. Plastic piping shall be supported at not more than four foot intervals. Drain lines shall be sloped ¼ inch per foot toward the drain outlet. Where it is impractical, due to structure features or other arrangements, the piping may have a grade of no less than ⅛ inch per foot, when a properly installed full-size cleanout is installed at the upper end. Be sure to use approved materials to assemble the piping material.

(Test DWV system as required in Appendix C)

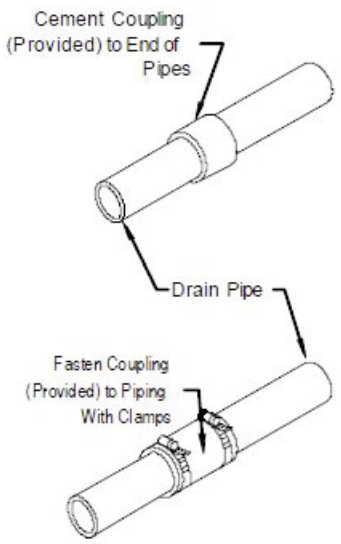

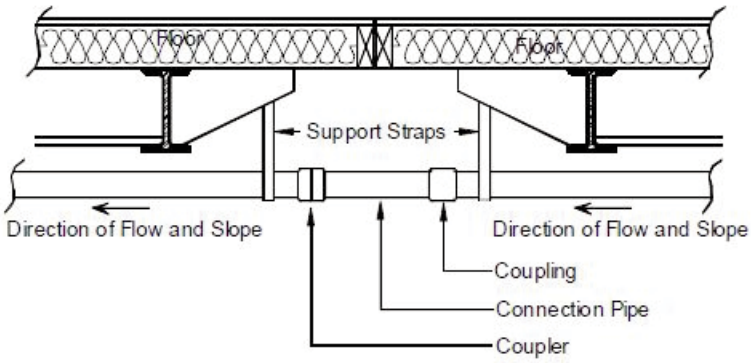

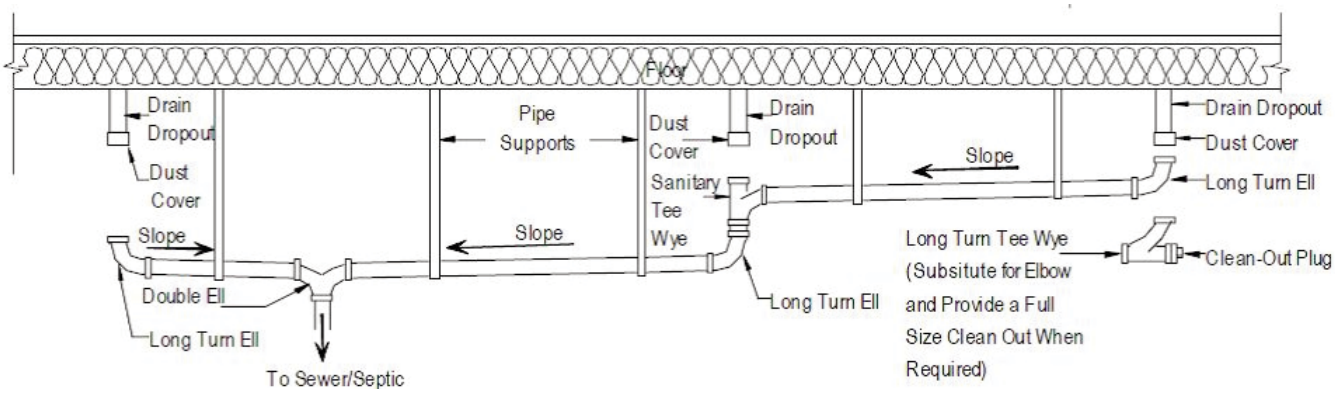

Gas Connections

All materials used for the installation, extension, alteration or repair of any gas piping system shall be new and free from defects or internal obstructions. Inferior or defective materials shall be removed and replaced with acceptable materials.

All points of the crossover shall be accessible from the exterior of the home. The crossover connector must be listed for exterior use and a shutoff valve suitable for outdoor use must be installed at each crossover point upstream of the connection.

Any connection(s) made by a listed quick disconnect device shall be designed to provide a positive seal of the supply side of the gas system when such device is separated. Flexible gas line connectors are not to be reused once engaged.

Test for leaks (Refer to Appendix A for testing procedures)

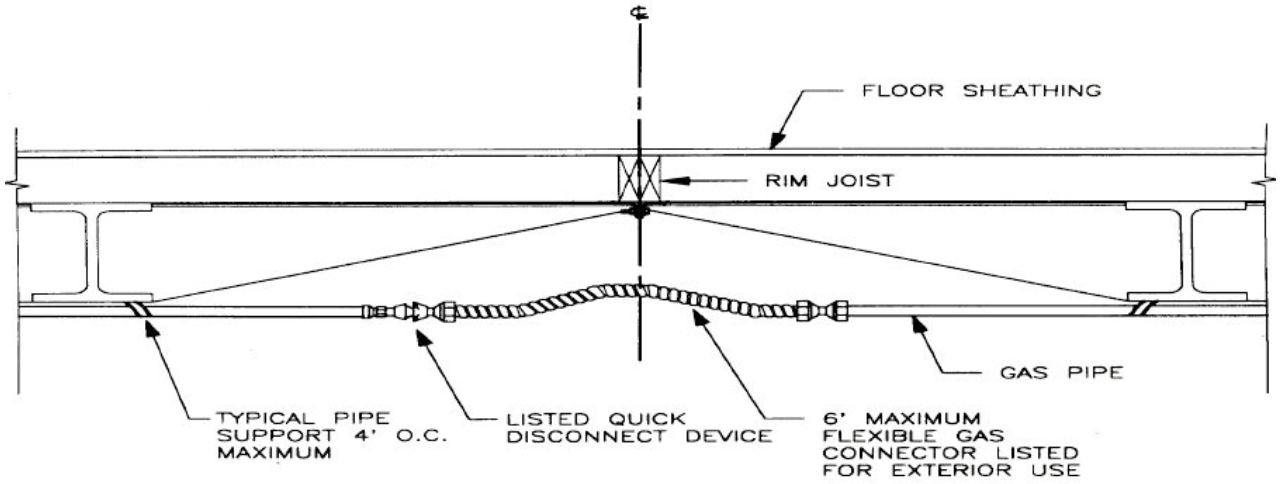

Heat Tape

A receptacle outlet for the use of a heat tape should be located on the underside of the manufactured home within 2 feet of the water supply inlet. This is a dedicated receptacle for the heat tape only. This receptacle is not GFCI protected.

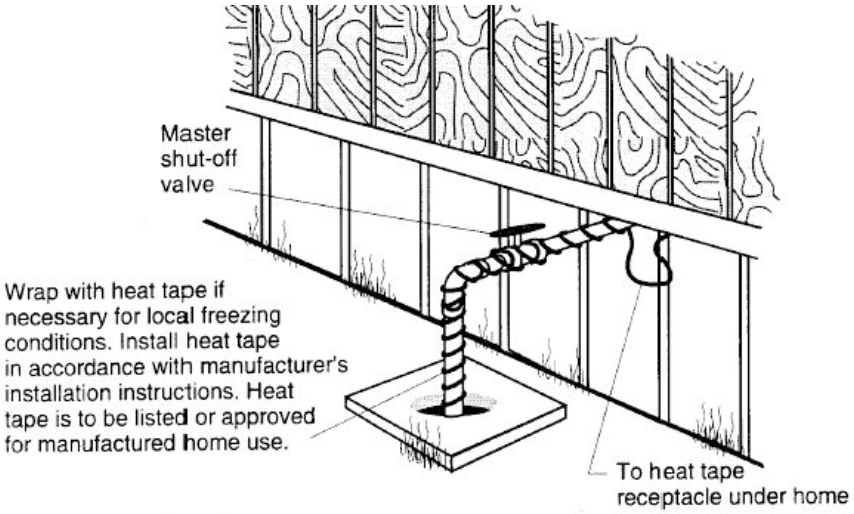

Dryer Exhaust Duct

Clothes dryer exhaust ducts MUST exhaust to the exterior of the home AND any perimeter foundation or skirting. Do not let the exhaust duct terminate under the home where excessive moisture or flammable material can accumulate. The duct must be adequately sealed and supported. Install the duct in accordance with the manufacturer's instructions.

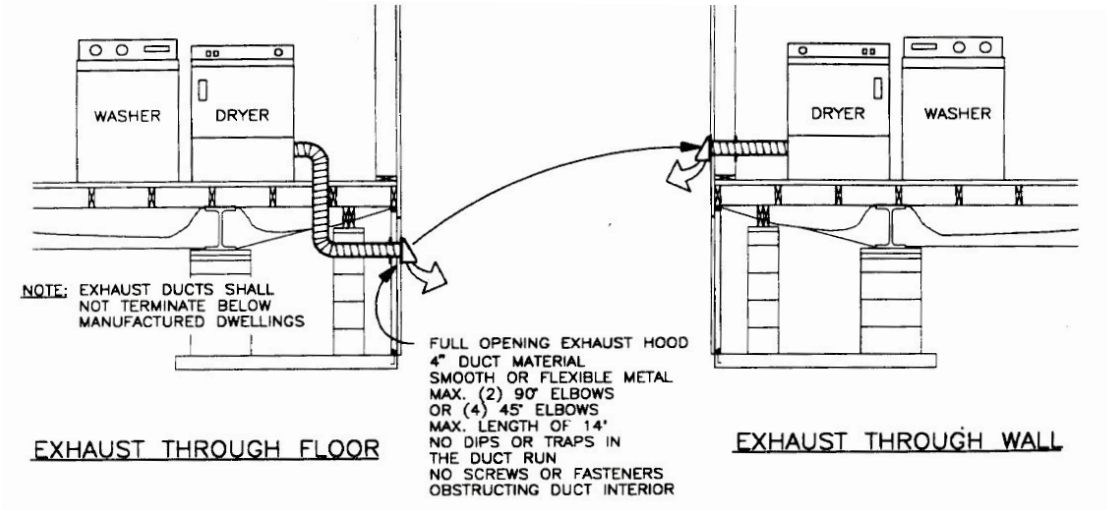

Fireplace Installation

Install chimneys, chimney flashing and roofing, fireplace combustion air inlets and hearths according to the manufacturer's instructions and the procedures described below. Fireplace and wood stoves may require on-site installation of additional sections of approved chimney pipe, spark arrestor and a rain cap assembly. Follow the manufacturer's instructions.

To assure sufficient draft for proper operation, extend the chimney at least three feet above the highest point where it penetrates the roof and at least two feet higher than any surface within 10 feet of the chimney (See figure below).

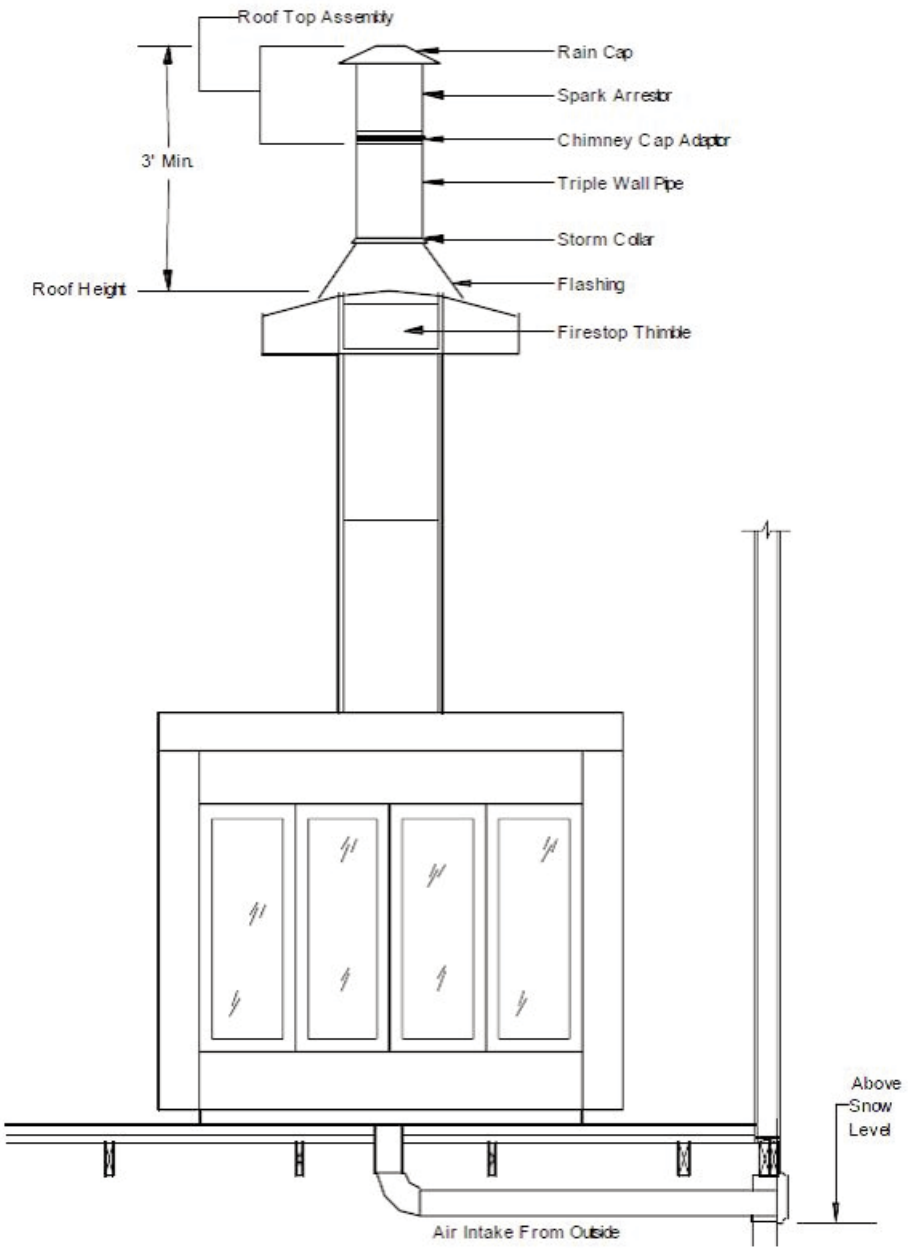

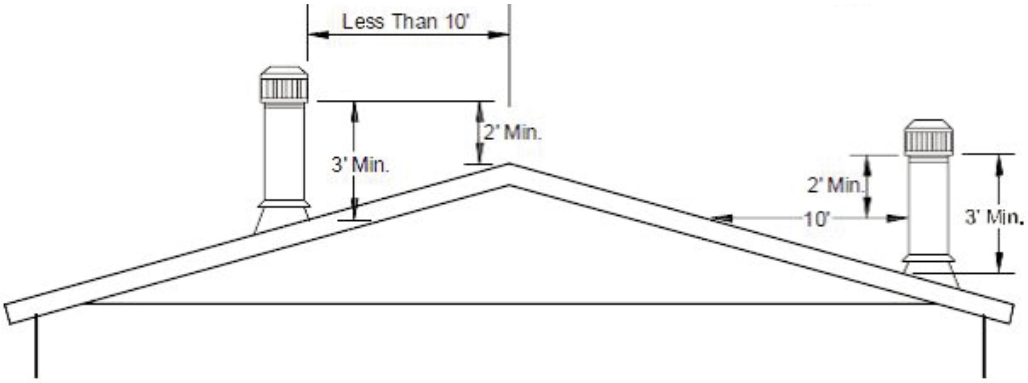

FIREBLOCKING DETAILS

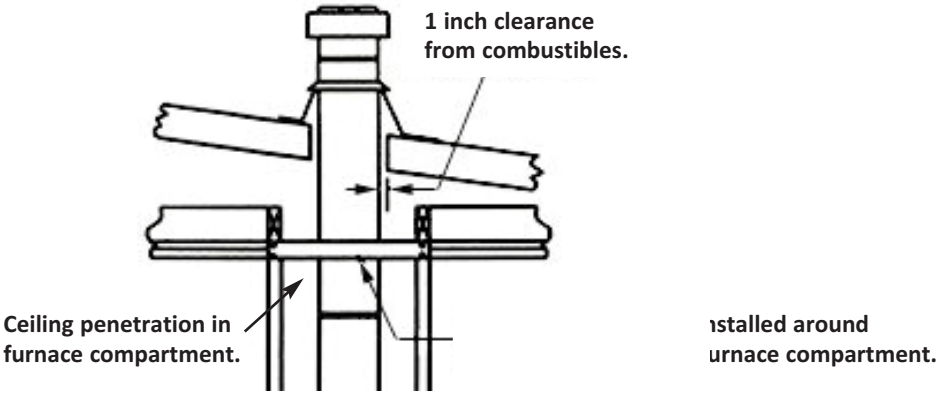

Fireblocking must be installed around the openings for pipes, vents and other penetrations in the walls, floors and ceilings of furnace and water heater spaces. Materials MUST be noncombustible or limited combustible types conforming to ASTM E136.

FRESH AIR INTAKE

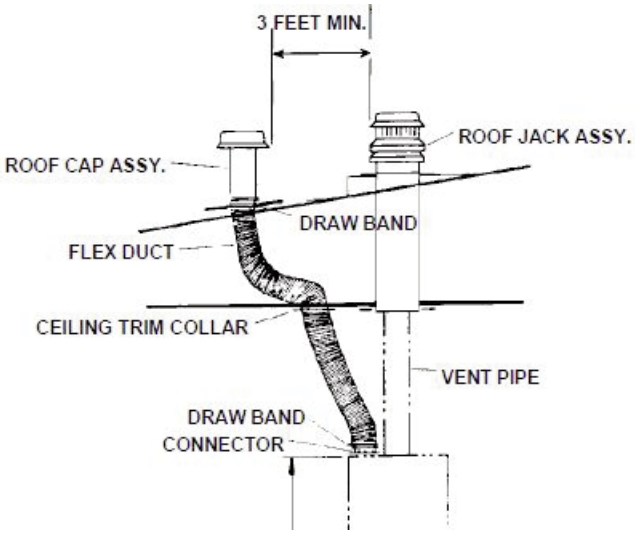

Crawl Space Enclosures

The perimeter enclosure material is to be of material manufactured for this purpose. The material shall be installed in a manner to accept frost heave, which could negatively impact the home. In collaboration with the required ground moisture barrier, the perimeter enclosure material shall be ventilated at least one square foot of free air per every 150 square feet of floor area.

An access panel to allow entrance into the crawl space must be provided with a minimum width of 24 inches.

Bottom Board Material

At the completion of the installation, check the bottom board material (likely a black plastic material under the floor) to assure all openings, including any utility connection and access panels have been sealed with a durable material.

Accessory Structures

Accessory structures (porches, stairs, decks, garages, carports etc.) shall be free-standing and independently supported as to not place additional loads onto the home. The construction of these structures shall be done in accordance with the Pennsylvania Uniform Construction Code.

Utility System Testing

The gas piping to the appliances (if equipped) must be tested to assure no leaks. Testing procedures are outlined under Appendix –A.

Water supply lines must be inspected for damage and tested to assure the system is water tight. Water supply piping must not be exposed to freezing temperatures. See Appendix –B for test procedures.

The drain-waste-vent plumbing system must be inspected for damage, proper support and slope and tested to assure the system is water tight. See Appendix –C

The electrical system must be properly tested. The testing procedures are outlined in Appendix –E. For additional information regarding the electrical system in manufactured housing, refer to the Manufactured Home Construction and Safety Standards, Subpart I. In addition, Article 550 of the 2005 National Electric Code may be utilized.

Appendix A – Gas line testing procedures

If so equipped, the gas lines to appliances shall be visually inspected and tested to assure that there are no leaks.

1.1 If no visible damage to the gas line piping is apparent, the gas piping may be examined with all connections and joints tested consistent with the following procedures. The fuel provider may substitute alternate test procedures.

1.1.1 Assure that all exhaust vents on gas-fired equipment are not damaged and are securely connected. Roof jacks and stacks may have come loose during transit and must be inspected to assure they are properly installed.

1.1.2 All gas-fired appliances must be listed as suitable for use in manufactured housing and installed consistent with the installation instructions.

1.2 **PIPING ONLY TEST** Connect all appliances and place all shut off valves in the closed position. Attach to the home's gas inlet a mercury manometer or slope gauge calibrated in increments not more than 1/10 lbs. Unregulated or excessive pressures may result in damage to the appliance; caution should be exercised when pressurizing any piping. Only qualified personnel should perform this testing.

1.2.1 Pressurize the system to 3 psi and remove the pressure source from the system. The system should hold pressure for 10 minutes.

1.2.1.1 Equivalencies to 3 psi pressure

1.2.1.1.1 48 ounces per square inch

1.2.1.1.2 84-inch water column

1.2.1.1.3 6-inch mercury column

1.2.2 If the pressure drops, check all joints and connections tested for leakage with a non-corrosive, soapy water or bubble solution or other approved leak detecting method. If bubbles form, tighten the connection and retest.

1.2.3 If the leak persists, replace defective piping and fittings. Repairs to the pipes or fittings are prohibited.

1.2.4 Release pressure and rinse all tested connections with water to remove the leak detection fluid.

1.3 **ENTIRE SYSTEM TEST** Close all appliance controls and pilot lights according to the manufacturer's instructions. Open the gas shutoff valves to all equipment. Attach to the home's gas inlet a pressure gauge calibrated in ounces.

1.3.1 Pressurize the system with compressed air six to eight ounces (3/8 to ½ psi, or 10 to 14 inches of water column, .75-to 1-inch mercury column).

1.3.2 Check for leaks by all joints and connections with a noncorrosive, soapy water or bubble solution or other approved leak detecting method.

1.4 If any gas piping is replaced or newly installed, then pressure testing of the gas piping system must be conducted in accordance with International Residential Code Section G2417.

1.5 Most flexible gas line connectors are designed for one-time use only. If these connectors are disconnected from the appliance, piping or another connector, they must be replaced.

1.6 Before being placed in operation, the piping system must be purged in accordance with IRC G2417 (IFGC 406)

Appendix B – Water supply line testing

1.1 The water supply piping system should be inspected to assure the system is watertight.

1.2 Flow of water should be checked at each outlet (water closet, tub, sink, washer, outside faucet, ice maker or any other fixture if so equipped).

1.2.1 Impeded or restricted flow should be investigated and corrected.

1.3 Visual inspection should be conducted at all visible piping and joints.

1.3.1 Leaking supply pipes and fittings must be replaced. Crimped connections may not be re-crimped in an attempt to repair a leak.

1.4 After all work is completed, the water supply lines should be tested and proven airtight under water pressure applied to the house at normal working pressure of the systems but not less than 50 psi. This test should be held for 15 minutes without evidence of pressure loss.

1.4.1 Do not pressurize the water supply lines greater than 50 psi.

1.4.2 Only potable water should be used for this test.

Appendix C – DWV system testing

After all repair work has been completed, the DWV piping system should be inspected to assure the system is watertight.

1.1 Inspect the DWV system assuring that any auto vents or air admittance valves are in place.

1.2 Pour water through the high fixtures (sinks), checking for impeded flow and obvious leaks at strainers and traps. Repair as needed and retest.

1.3 Cap the end of the drainage system where it drops out through the floor of the home. Fill the entire system with water to the rim of each water closet, and hold for 10 minutes (be sure to release any trapped air by inserting a hose into the trap of the water closet). Investigate any drop in water level by visual inspection to locate the location of the leak.

1.4 Repair any leaking area and retest as stated above. Be cautious when replacing DWV piping materials. If replacing ABS plastic drain lines with CPVC, mechanical couplers must be used at the point of transition.

Appendix E – Electrical operation and continuity testing

After providing a source of power to the home, a test must be conducted to assure that all electrical devices, switches, equipment, appliances and safety apparatus are in good working order. Equipment needed for this test include at a minimum: GFCI Receptacle Tester (this tester will accomplish operation, polarity and continuity tests at electrical receptacles) light bulbs sized for installation in each light fixture installed in the home and a continuity tester.

1.1 With power supplied to the home, apply the GFCI Receptacle Tester in every receptacle including the heat tape receptacle located under the floor of the home.

1.2 Activate test GFCI test button on the tester to assure proper protection is present:

1.2.1 All electrical outlets in bathrooms

1.2.2 All outside receptacles

1.2.2.1 Exception: homes constructed before June 9, 2014, the heat tape receptacle (located on the underside of the home) is NOT GFCI protected.

(Homes constructed on or after June 9, 2014, the heat tape receptacle will be GFCI protected.)

1.2.3 Often the GFCI receptacle in one bathroom will serve "slave" receptacles in all bathrooms in the home. Testing may require resetting at the master device.

1.2.4 The GFCI receptacles in the kitchen/dining area may serve no other outlets.

1.2.5 Homes constructed before June 9, 2014: all receptacles serving the kitchen countertops within 6 feet of a sink are to be GFCI protected. Homes constructed on or after June 9, 2014: all receptacles serving the countertop are to be GFCI protected as well as receptacles located within 6 feet of a wet bar sink.

1.2.6 ARC Fault protection is not a requirement in manufactured housing.

1.3 Light bulbs must be installed in every light fixture and switches must be turned on to assure proper operation.

1.4 Electrical disconnects, including over current protection (circuit breakers) should be operated to assure proper operation.

1.5 Activate test buttons on smoke alarms to assure proper operation.

1.5.1 Manufactured homes produced prior to September 2002 are equipped with smoke detectors and therefore NOT interconnected.

1.5.2 Manufactured homes produced prior to September 2002 are only required to be equipped with one smoke detector outside of each bedroom area.

1.6 Noncurrent carrying metal parts of the home should be tested to assure proper bonding. These parts may include metal heat ducts, metal roofing or siding, metal electrical fixture canopies, etc.

1.6.1 For multisection homes, a visual inspection should occur to determine if the bonding wire is properly connected at the chassis of each section.

1.6.2 #8 uninsulated copper wire and grounding lugs on each chassis are provided by the manufacturer

1.6.3 The neutral and ground conductors are to be isolated in manufactured housing. Any panel board or appliance bonding strap must be removed.

Installation Checklist for Relocated Manufactured Homes

Certified Pennsylvania Manufactured Home Installers must properly complete this checklist to assure proper installation. See page 2 of this guideline for other information regarding installer responsibilities.

Home Address: _____

Installer Name: _____ Installer ID #: _____

Foundation Support

- ☐ Footings are properly sized and constructed for the soil conditions.
- ☐ Piers are spaced and constructed according to the tables provided.
- ☐ Perimeter blocking is provided (if necessary).
- ☐ Piers at each side of openings four feet or larger (side wall and marriage line).
- ☐ Shims are in place and tight.
- ☐ Home is level.

Anchors

- ☐ Approved anchors are used.
- ☐ Anchor spacing is correct.
- ☐ Anchors are installed to full depth.
- ☐ Straps are installed at correct angles.
- ☐ Straps are protected at the sharp corners.
- ☐ Stabilizing plates are installed.

Under the Home

- ☐ Site is properly graded.
- ☐ Ground moisture barrier is installed.
- ☐ No holes or tears are present in the bottom board.
- ☐ Skirting is properly installed.
- ☐ Crawl space is properly ventilated.

Exterior

- ☐ Roof shingles are free from damage.
- ☐ Roof ridge vent is installed correctly (if applicable).
- ☐ Any penetration in the roof is properly sealed.
- ☐ Siding is free from damage.

Interior

- ☐ Ceilings, walls and floors are free from major defects.
- ☐ Windows operate properly.
- ☐ Exterior doors operate properly.
- ☐ Marriage line is properly sealed from air infiltration.

Systems

- ☐ Electrical fixtures operate properly (Operational / Polarity).
- ☐ Water lines are free from defects (leaks).
- ☐ Drainage system is free from defects (leaks).
- ☐ Gas system is free from leaks.
- ☐ Smoke alarms operate properly.

Appliances

- ☐ Appliance venting is in accordance with manufacturer's instructions.
- ☐ Fireblocking is complete.
- ☐ Fresh air intakes are properly installed.
- ☐ Appliances are working properly.
- ☐ Fireplace chimney stack and combustion air intake are completed properly.
- ☐ Anti-tip device for the cooking range is properly connected.